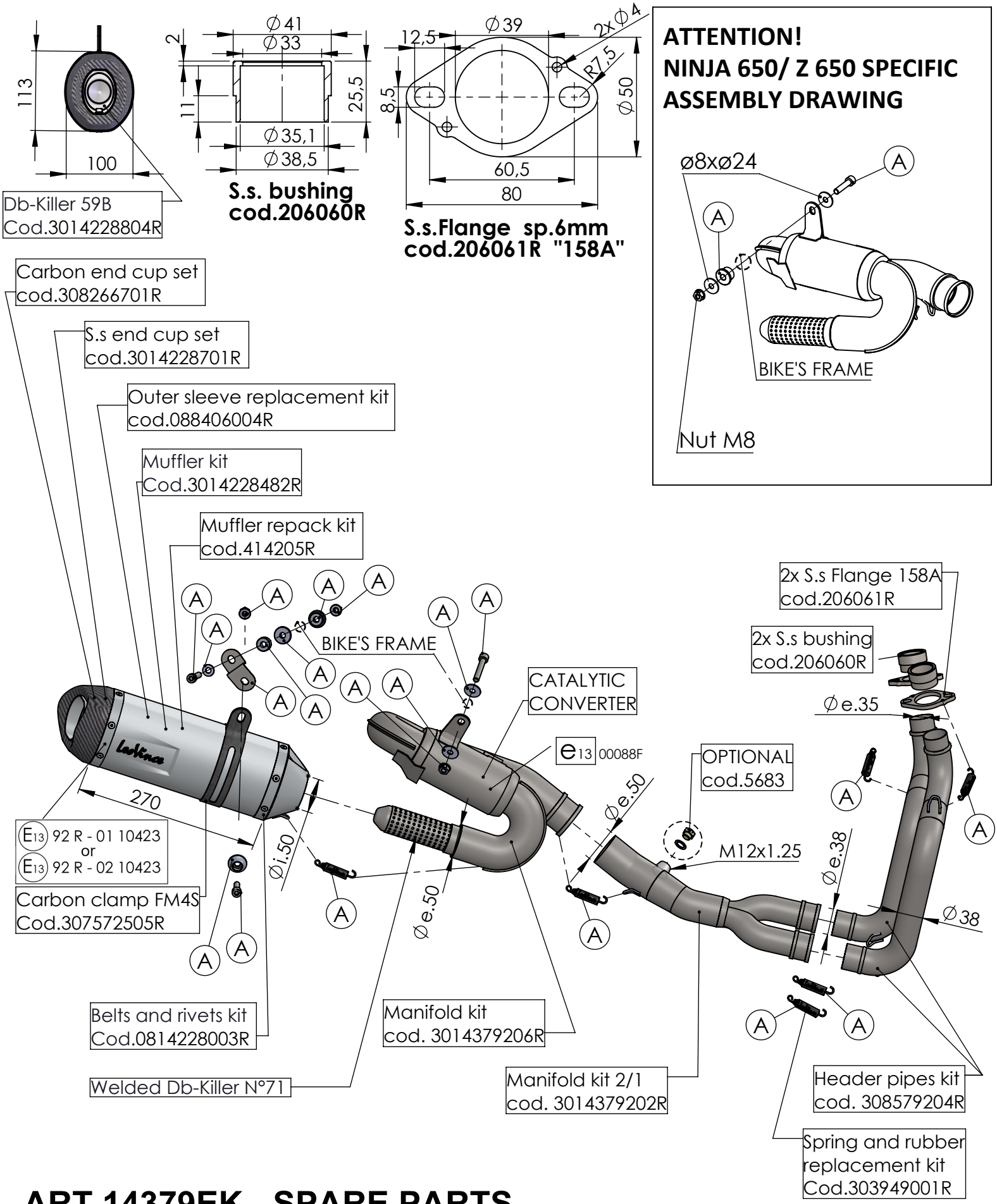

ART.14379EK - SPARE PARTS

KAWASAKI Z 650 / Z 650 RS / NINJA 650 / VERSYS 650
(Also fits 35kW version) (Fits with original panniers)

Ⓐ FITTING KIT cod.3014379601R