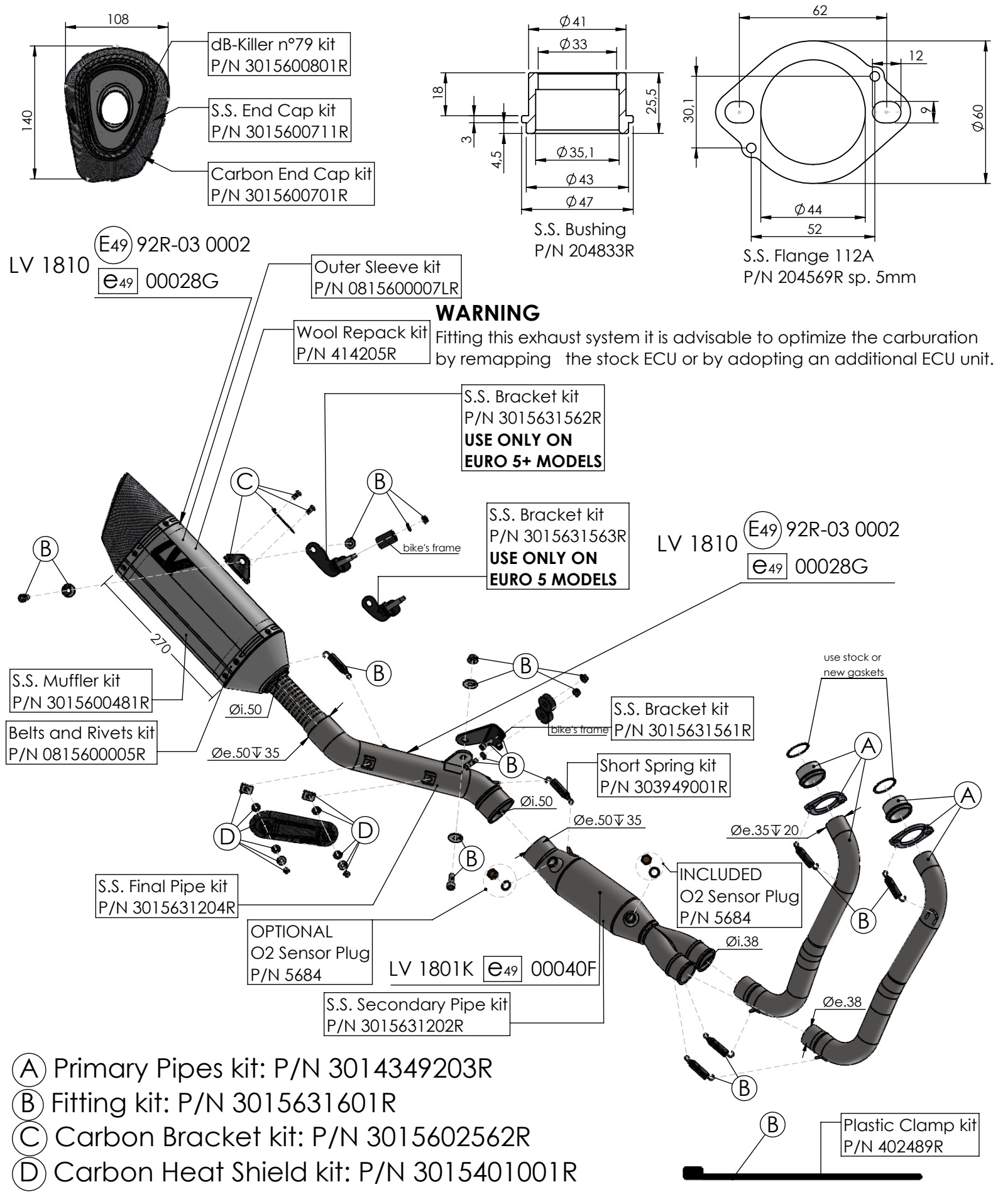

Ⓐ Primary Pipes kit: P/N 3014349203R
Ⓑ Fitting kit: P/N 3015631601R
Ⓒ Carbon Bracket kit: P/N 3015602562R
Ⓓ Carbon Heat Shield kit: P/N 3015401001R

ART. 15631K - SPARE PARTS

YAMAHA MT-07 (also fits 35kW version)

FULL SYSTEM LV-14R STAINLESS STEEL APPROVED

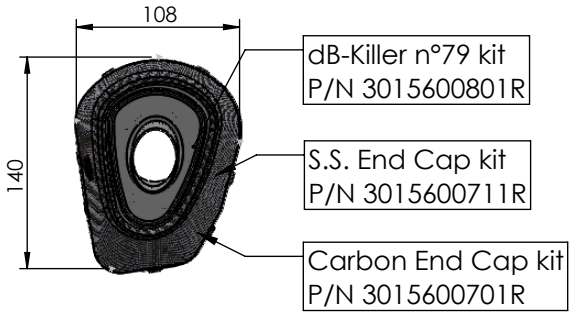

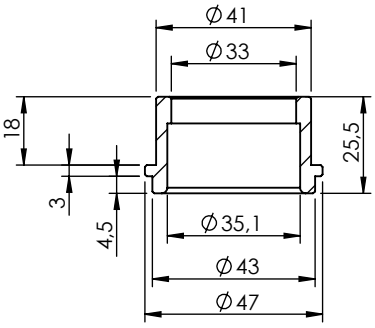

S.S. Bushing
P/N 204833R

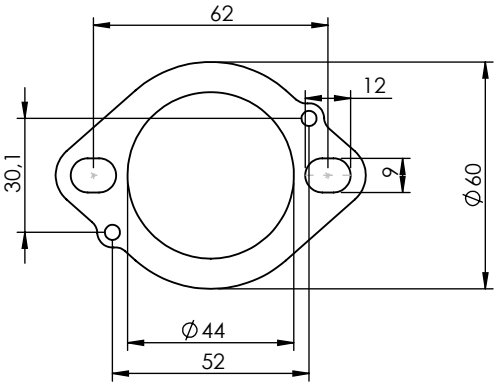

S.S. Flange 112A
P/N 204569R sp. 5mm

LV 1810 E49 92R-03 0002
e49 00028G

Outer Sleeve kit
P/N 0815600007LR

Wool Repack kit
P/N 414205R

WARNING
Fitting this exhaust system it is advisable to optimize the carburation by remapping the stock ECU or by adopting an additional ECU unit.

S.S. Bracket kit
P/N 3015631564R

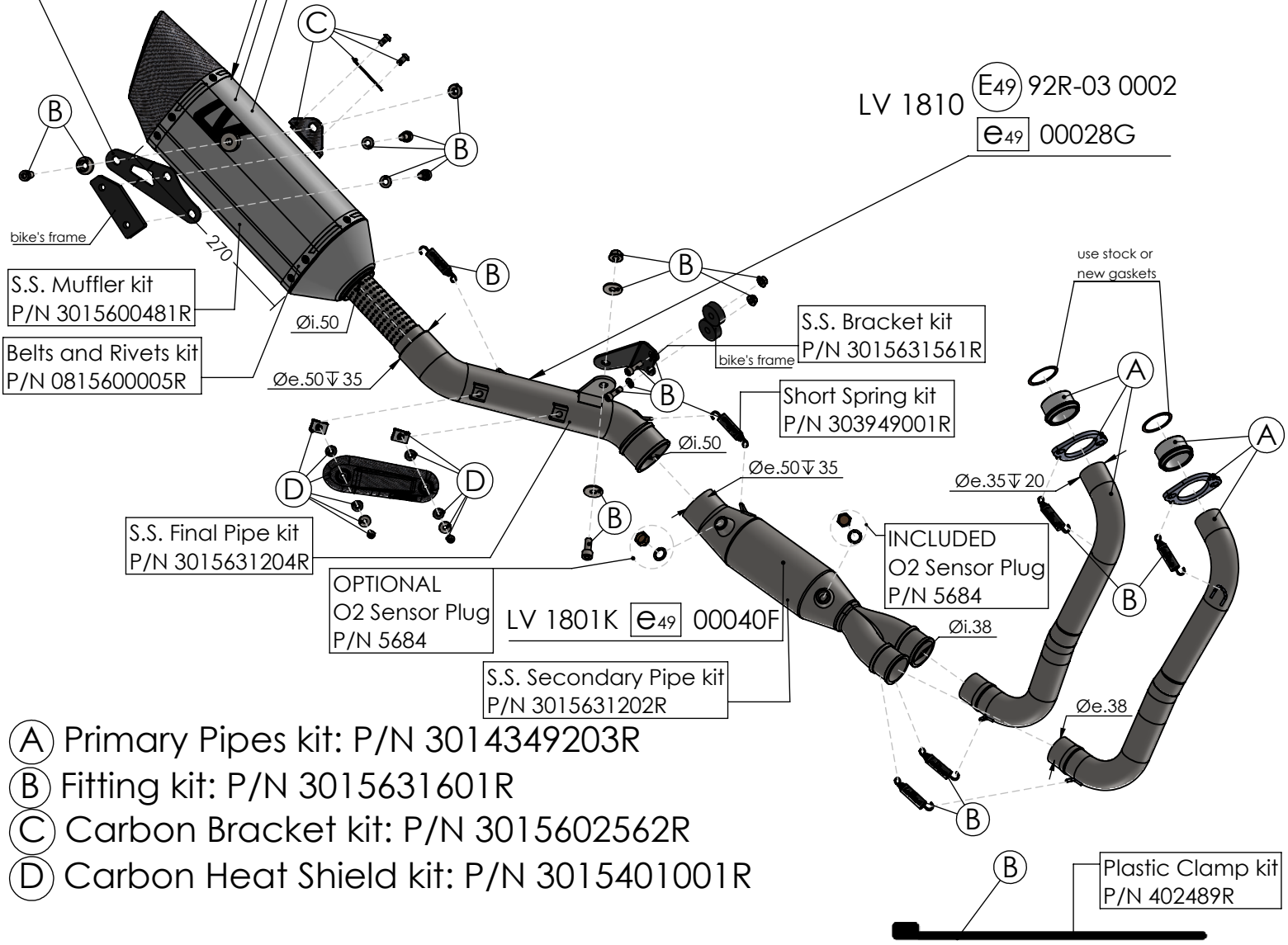

LV 1810 E49 92R-03 0002
e49 00028G

Ⓐ Primary Pipes kit: P/N 3014349203R
Ⓑ Fitting kit: P/N 3015631601R
Ⓒ Carbon Bracket kit: P/N 3015602562R
Ⓓ Carbon Heat Shield kit: P/N 3015401001R

ART. 15631K - SPARE PARTS

YAMAHA TRACER 7 / TRACER 7 GT
(also fits 35kW version) (fit with original panniers **ONLY 2020-2024 VERSIONS**)

FULL SYSTEM LV-14R STAINLESS STEEL APPROVED

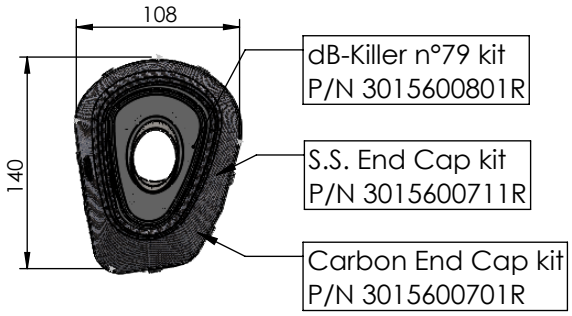

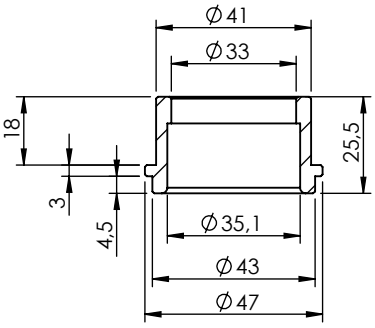

S.S. Bushing
P/N 204833R

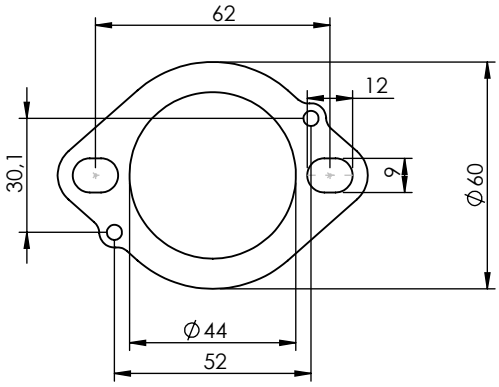

S.S. Flange 112A
P/N 204569R sp. 5mm

LV 1810 E49 92R-03 0002
e49 00028G

Outer Sleeve kit
P/N 0815600007LR

Wool Repack kit
P/N 414205R

WARNING
Fitting this exhaust system it is advisable to optimize the carburation by remapping the stock ECU or by adopting an additional ECU unit.

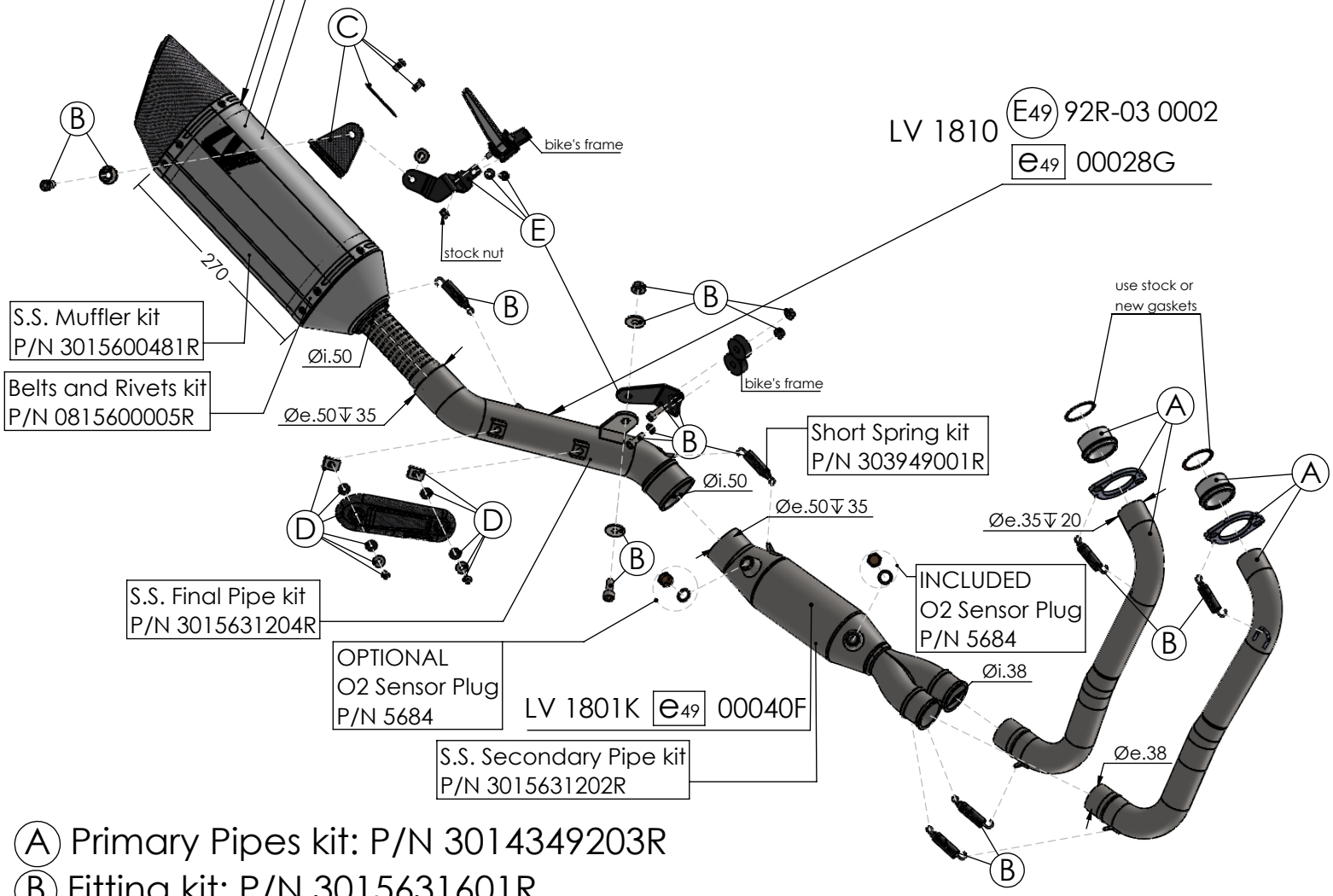

Ⓐ Primary Pipes kit: P/N 3014349203R
Ⓑ Fitting kit: P/N 3015631601R
Ⓒ Carbon Bracket kit: P/N 3015606561R
Ⓓ Carbon Heat Shield kit: P/N 3015401001R
Ⓔ Yamaha R7 kit: P/N 3015631565R

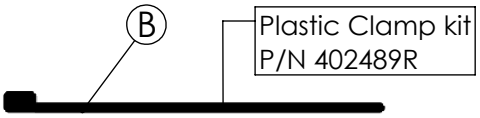

ART. 15631K - SPARE PARTS

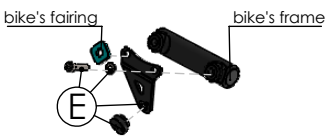

YAMAHA R7 (also fits 35kW version)

FULL SYSTEM LV-14R STAINLESS STEEL APPROVED