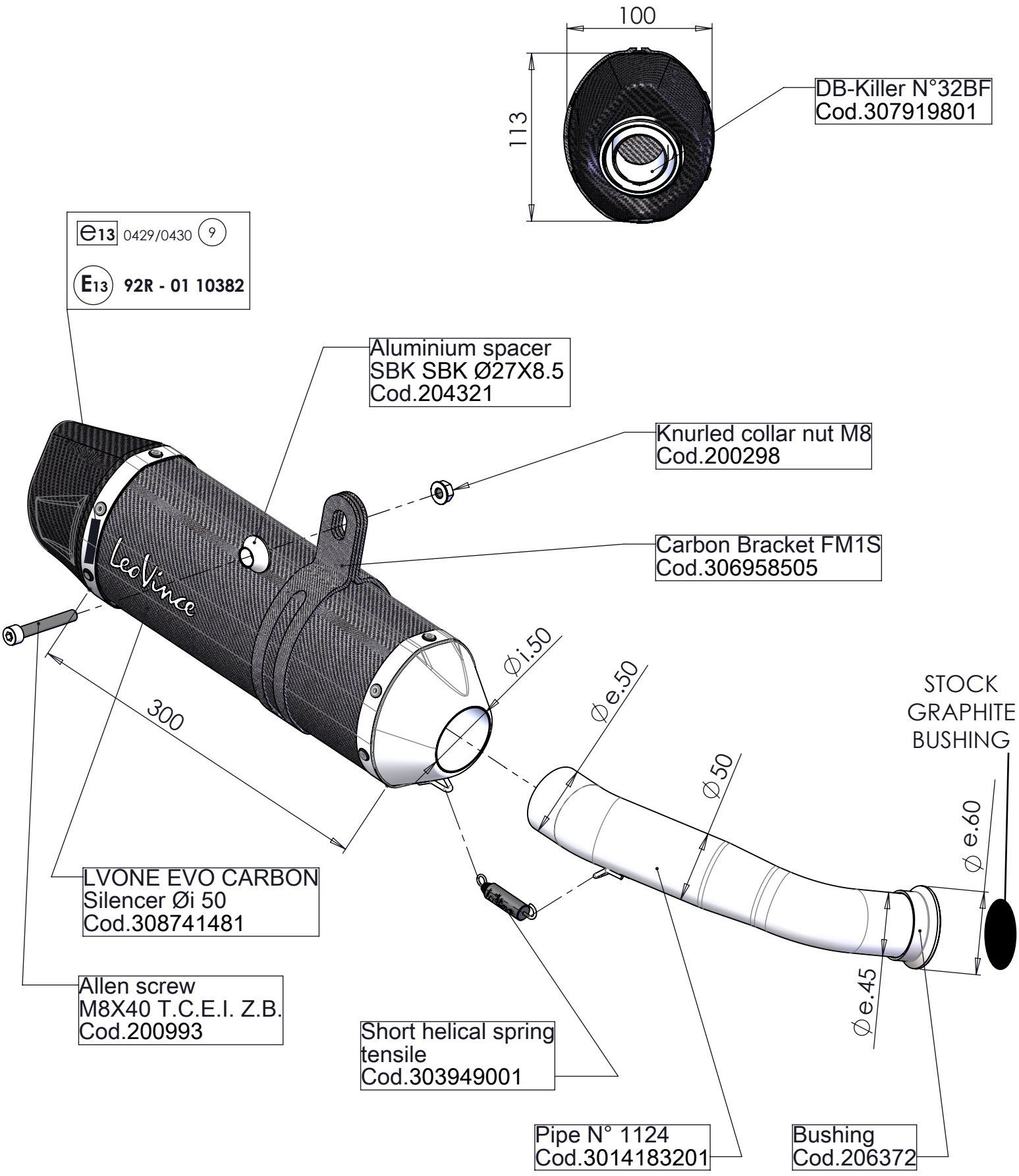

Art. 14186E

KTM RC 125 - DUKE 125 - RC 390 - DUKE 390 '17

Slip-on - LV ONE EVO CARBON - APPROVED