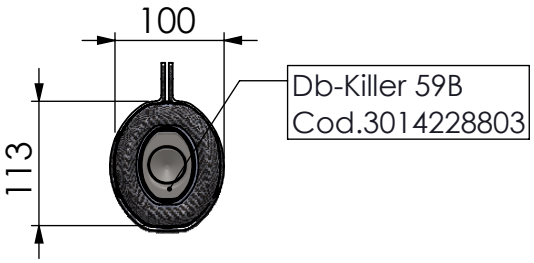

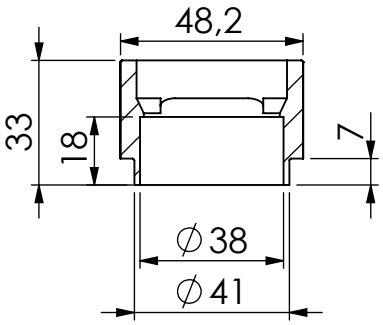

S.s.bushing cod.207022

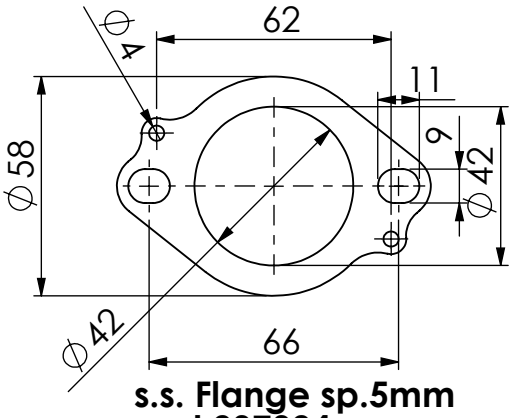

s.s. Flange sp.5mm cod.207024

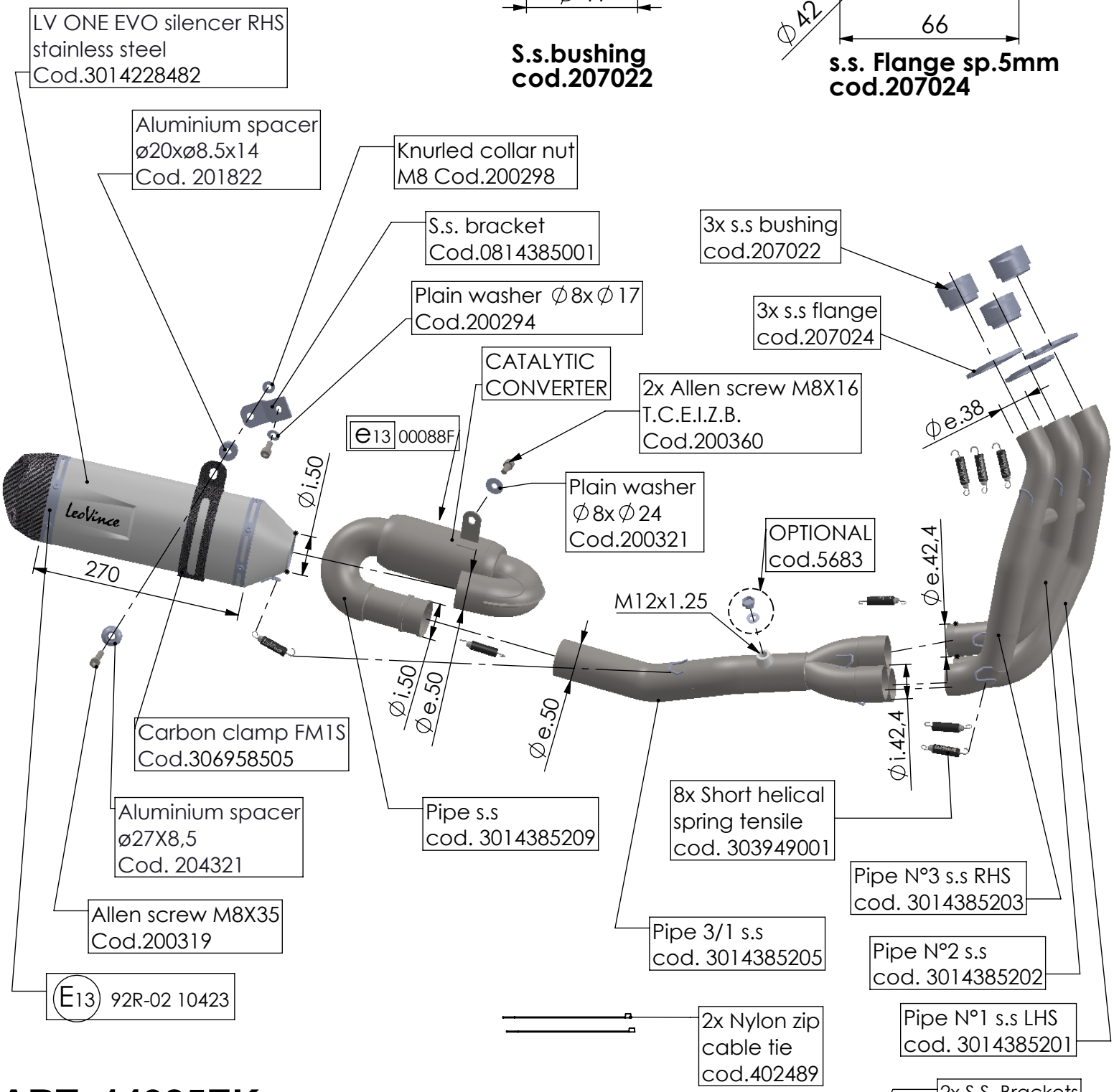

ART. 14385EK

(also fits 35kW version)

TRIUMPH TRIDENT 660 / TIGER 660

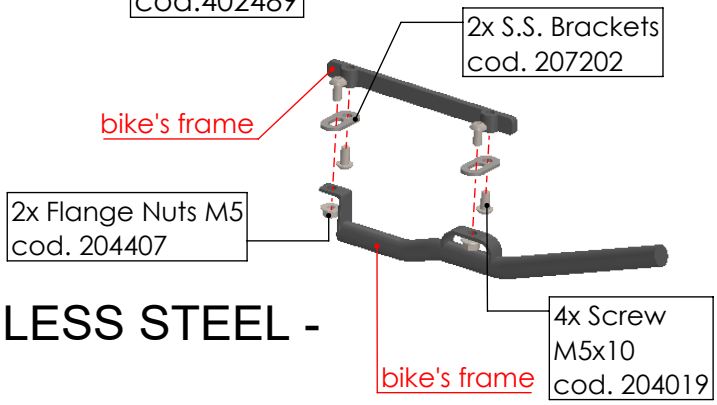

FULL SYSTEM - LV ONE EVO - STAINLESS STEEL - APPROVED