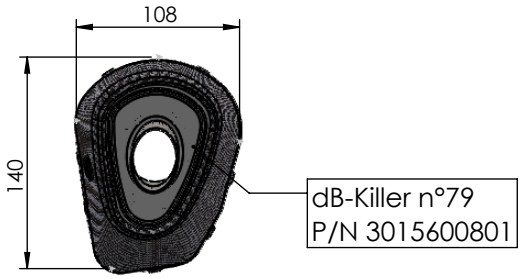

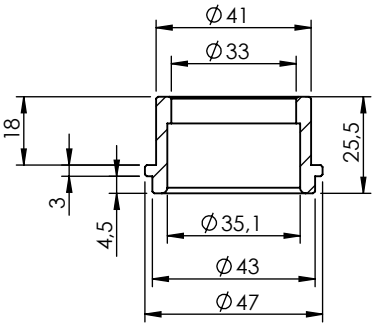

S.S. Bushing
P/N 204833

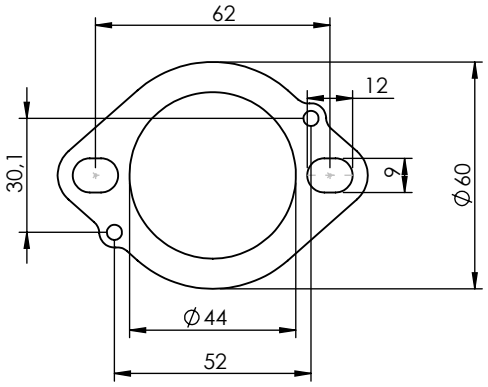

S.S. Flange 112A
P/N 204569 sp. 5mm

WARNING
Fitting this exhaust system it is advisable to optimize the carburation by remapping the stock ECU or by adopting an additional ECU unit.

S.S. Plate
P/N 207181

2x Screws
M6 x 12
P/N 201265

Carbon Bracket
P/N 0815602562

E49 92R-03 0002
LV 1810
e49 00028G

2x Screws
M8 x 20
P/N 200722

Alu Spacer
Ø22 Ø8,5 h.11
P/N 205090

S.S. Muffler
P/N 3015600481

270

Øi.50

Øe.50↧35

Mounting Plate M5
P/N 204555

Carbon Heat Shield
P/N 0815401001

4x Gaskets
Ø14 Ø4,9 h.1,5
P/N 200371

2x Washers
Ø15 Ø5
P/N 406580

2x Screws
M5 x 12
P/N 201031

S.S. Pipe
P/N 3015631203

2x Washers
Ø24 Ø8
P/N 200321

2x Flange Nuts M8
P/N 200298

Lock Nut M6
P/N 200322

bike's frame

2x Screws
M6 x 20
P/N 203508

3x Washers
Ø12 Ø6
P/N 200291

2x Flange Nuts M6
P/N 200333

S.S. Bracket
P/N 3015631501

bike's frame

6x Short Spring
P/N 303949001

Øi.50

Øe.50↧35

OPTIONAL
O2 Sensor Plug
P/N 5684

LV 1801K e49 00040F

S.S. Pipe
P/N 3015631201

S.S. Bracket
P/N 3015631502
USE ONLY ON EURO 5+ MODELS

S.S. Bracket
P/N 3015631503
USE ONLY ON EURO 5 MODELS

2x S.S. Flanges
P/N 204569

2x S.S. Bushings
P/N 204833

use stock or new gaskets

Øe.35↧20

INCLUDED
O2 Sensor Plug
P/N 5684

Øi.38

Øe.38

S.S. Pipe Left
P/N 3014349202

S.S. Pipe Right
P/N 3014349201

Plastic Clamp
P/N 402489

ART. 15631K

YAMAHA MT-07 (also fits 35kW version)

FULL SYSTEM LV-14R STAINLESS STEEL APPROVED

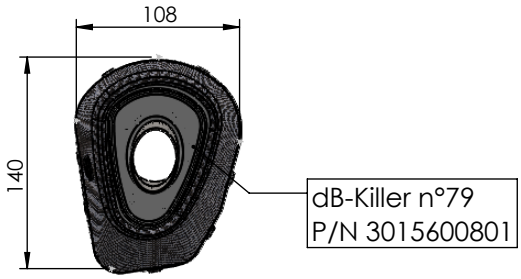

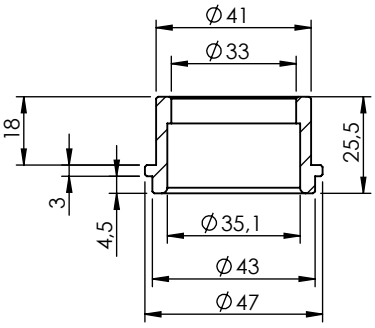

S.S. Bushing
P/N 204833

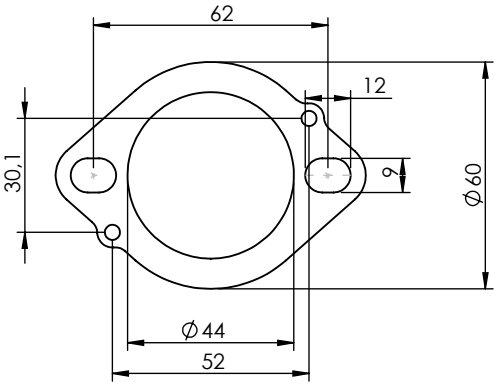

S.S. Flange 112A
P/N 204569 sp. 5mm

WARNING
Fitting this exhaust system it is advisable to optimize the carburation by remapping the stock ECU or by adopting an additional ECU unit.

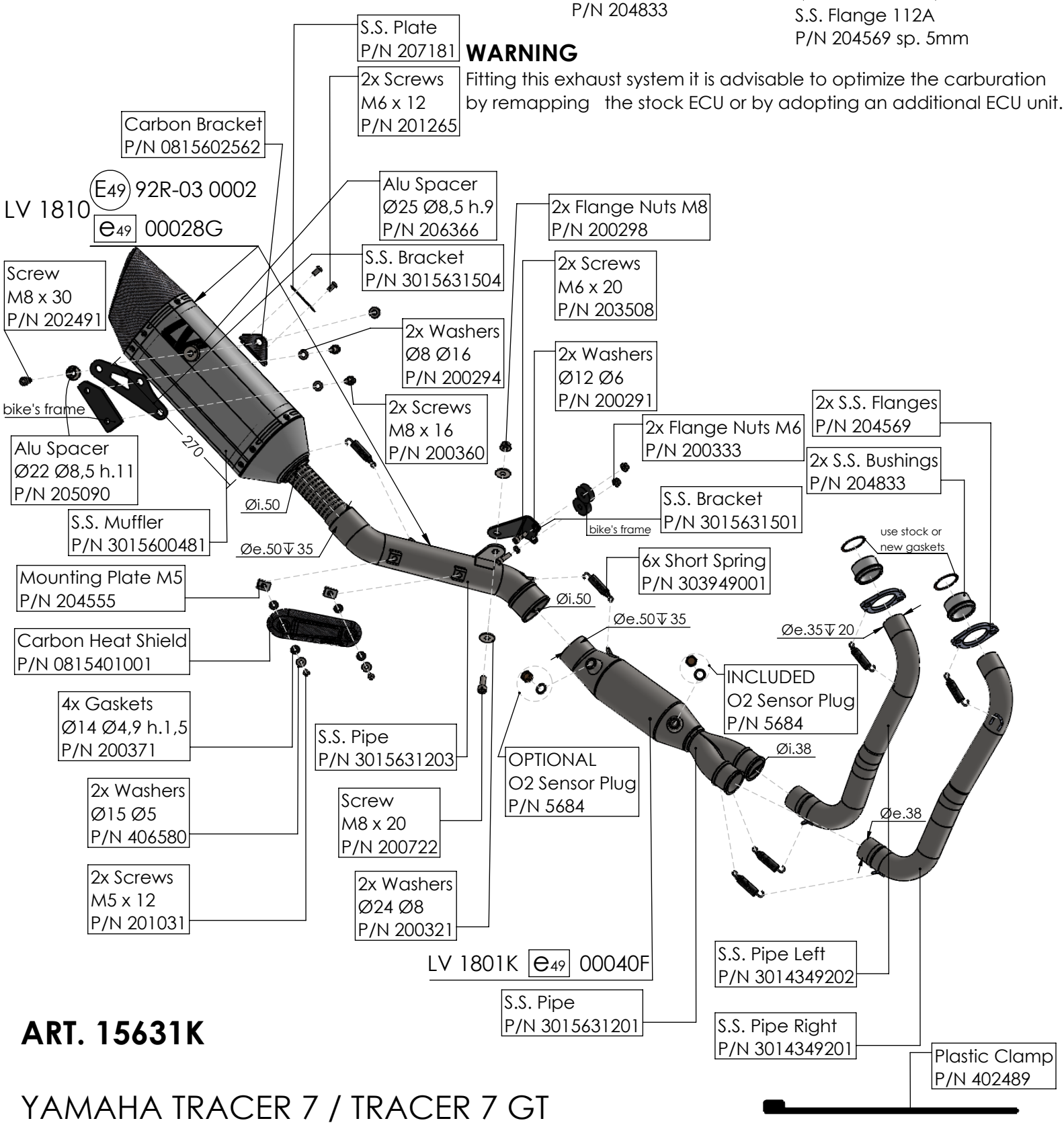

ART. 15631K

YAMAHA TRACER 7 / TRACER 7 GT
(also fits 35kW version) (fit with original panniers **ONLY 2020-2024 VERSIONS**)

FULL SYSTEM LV-14R STAINLESS STEEL APPROVED

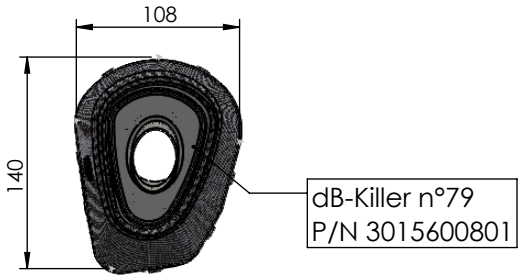

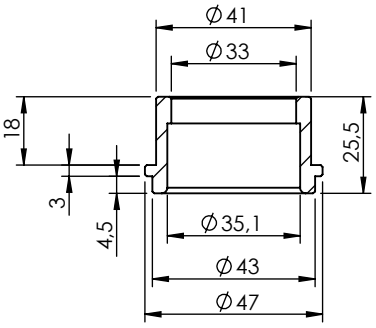

S.S. Bushing
P/N 204833

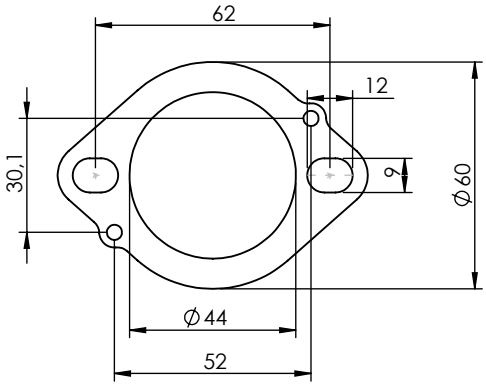

S.S. Flange 112A
P/N 204569 sp. 5mm

WARNING

Fitting this exhaust system it is advisable to optimize the carburation by remapping the stock ECU or by adopting an additional ECU unit.

LV 1810 E49 92R-03 0002
e49 00028G

S.S. Plate
P/N 207181

2x Screws
M6 x 12
P/N 201265

Carbon Bracket
P/N 0815602562

S.S. Bracket
P/N 3015631507

Washer
Ø6 Ø12
P/N 200291

2x Flange Nuts M8
P/N 200298

2x Screws
M6 x 20
P/N 203508

2x Screws
M8 x 20
P/N 200722

bike's frame

3x Washers
Ø12 Ø6
P/N 200291

stock nut

S.S. Screw
M6x14
P/N 200257

2x S.S. Flanges
P/N 204569

Alu Spacer
Ø22 Ø8,5 h.11
P/N 205090

270

2x Flange Nuts M6
P/N 200333

2x S.S. Bushings
P/N 204833

S.S. Muffler
P/N 3015600481

Øi.50

S.S. Bracket
P/N 3015631505

bike's frame

Øe.50↧35

use stock or
new gaskets

6x Short Spring
P/N 303949001

Mounting Plate M5
P/N 204555

Øi.50

Øe.50↧35

Øe.35↧20

Carbon Heat Shield
P/N 0815401001

INCLUDED
O2 Sensor Plug
P/N 5684

4x Gaskets
Ø14 Ø4,9 h.1,5
P/N 200371

S.S. Pipe
P/N 3015631203

Øi.38

2x Washers
Ø15 Ø5
P/N 406580

2x Washers
Ø24 Ø8
P/N 200321

OPTIONAL
O2 Sensor Plug
P/N 5684

Øe.38

2x Screws
M5 x 12
P/N 201031

LV 1801K e49 00040F

bike's fairing

bike's frame

S.S. Pipe
P/N 3015631201

S.S. Pipe Left
P/N 3014349202

S.S. Bracket
P/N 3015631506

Washer
Ø6 Ø18
P/N 201126

S.S. Pipe Right
P/N 3014349201

Rubber
P/N 204668

Screw
M6x25
P/N 204270

Plastic Clamp
P/N 402489

ART. 15631K

YAMAHA R7 (also fits 35kW version)

FULL SYSTEM LV-14R STAINLESS STEEL APPROVED